IS341/SIS334
BPM

BPMN to Petri nets Mapping

Core subset of BPMN elements

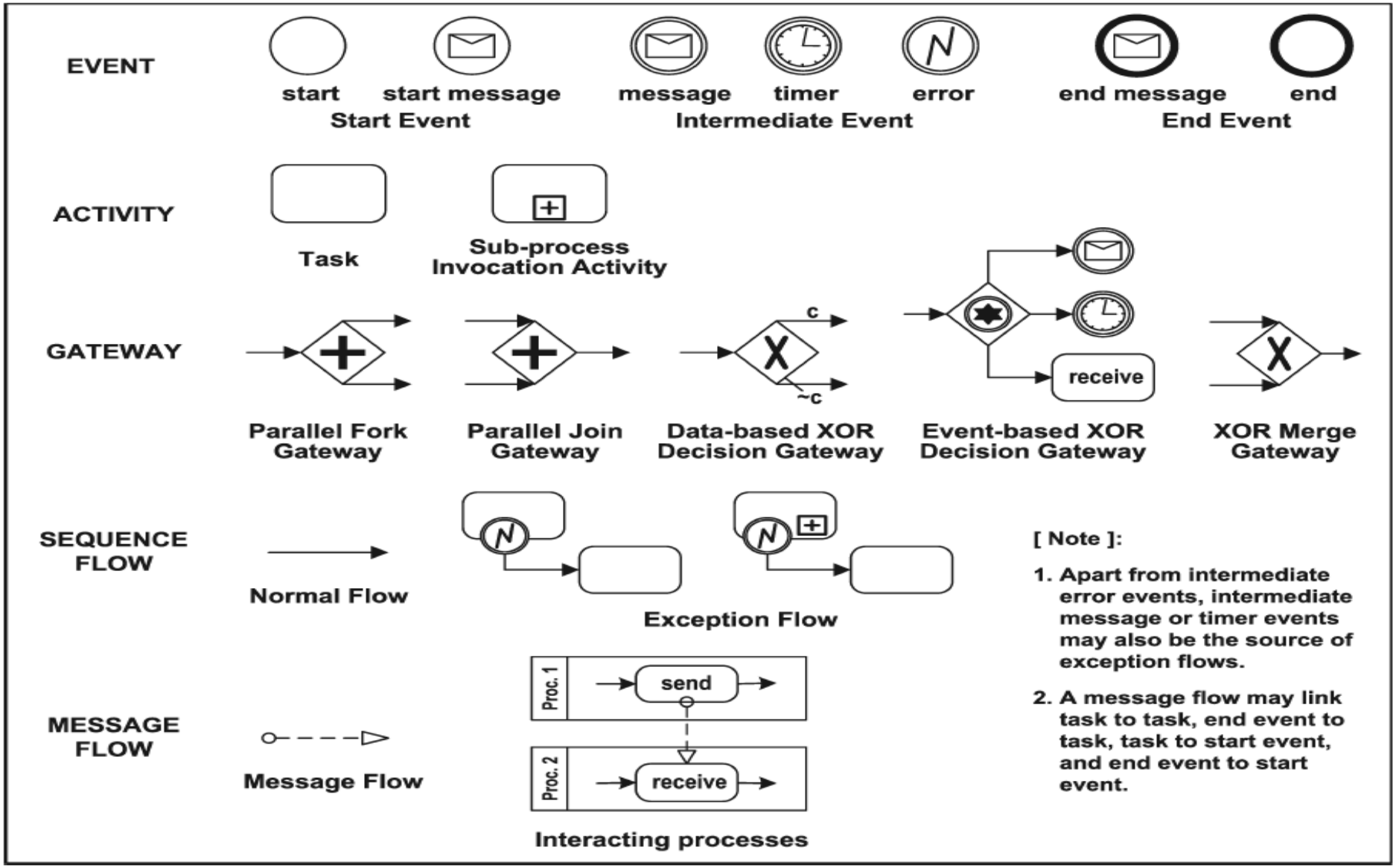

Mapping task, events, and gateways onto Petri-net modules

BPMN Object	Petri-net Module	BPMN Object	Petri-net Module
y Start s	P s t s P (s, y)	x End e	P (x, e) t e P e
x y Message E	P (x, E1) E1 P (E1, y)	x T y Task T	P (x, T1) T1 P (T1, y)
x y1 y2 Fork F1	P (x, F1) t F1 P (F1, y1) P (F1, y2)	x1 x2 y Join J1	P (x1, J1) P (x2, J1) t J1 P (J1, y)
x c y1 ~c y2 (Data-based) Decision D1	P (x, D1) t (D1, y1) P (D1, y1) t (D1, y2) P (D1, y2)	x1 x2 y Merge M1	P (x1, M1) t (M1, x1) P (x2, M1) t (M1, x2) P (M1, y)

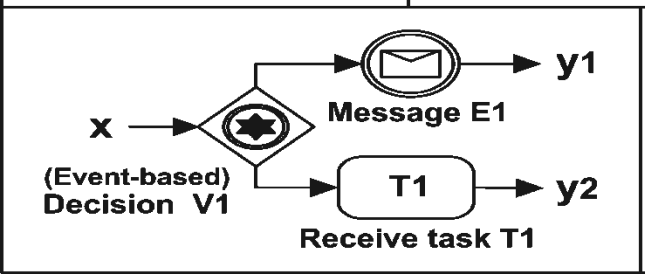

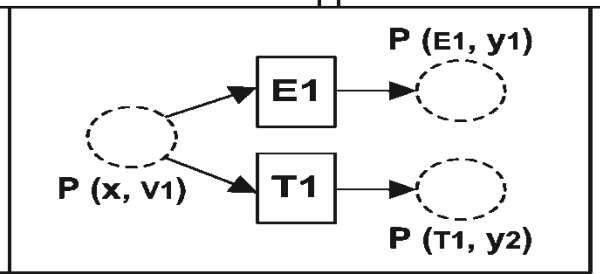

[Note]:

x, x1 or x2 represents an input object, and y, y1 or y2 represents an output object.

Examples of BPMN process models and transformations to Petri nets

- **Example 1**

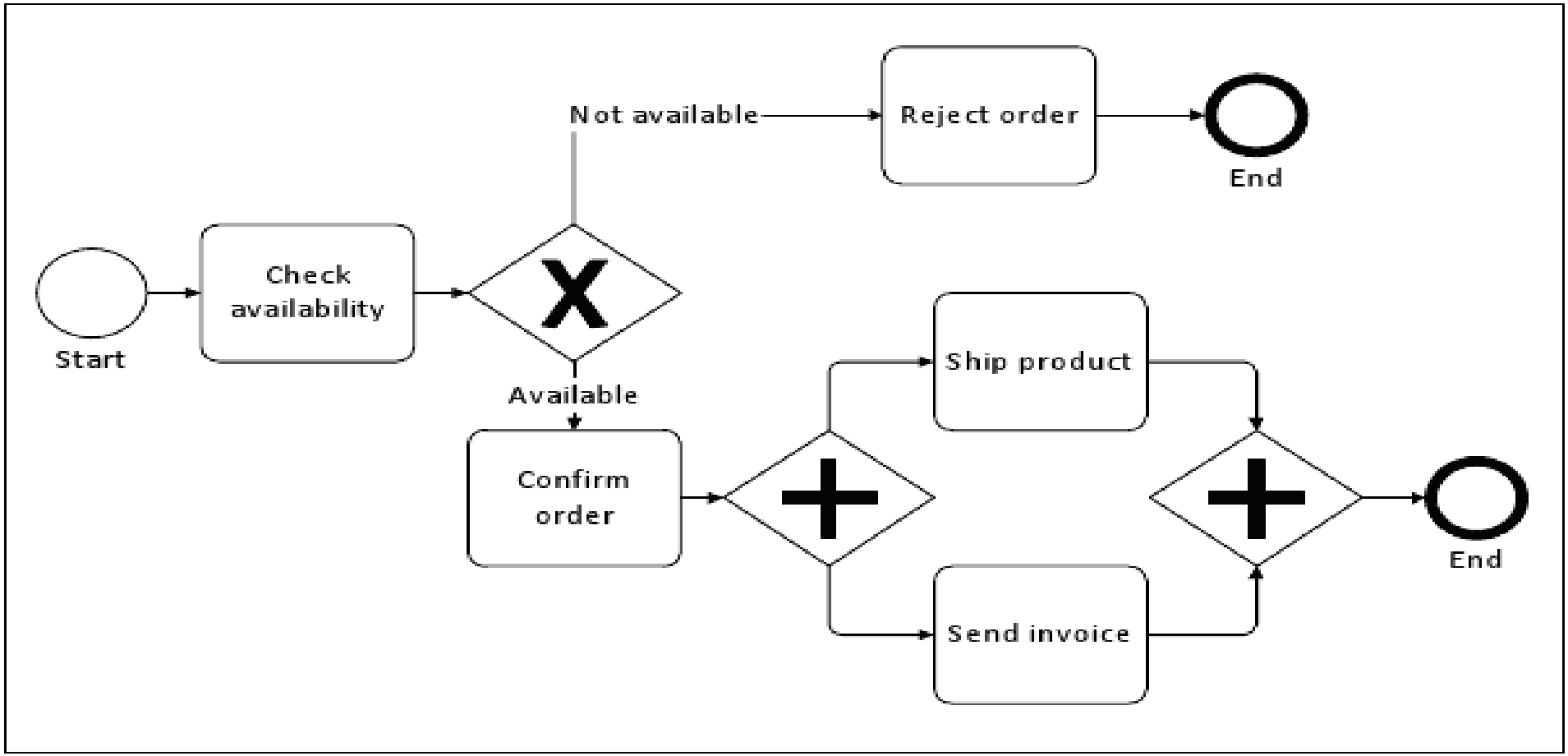

Examples of BPMN process models and transformations to Petri nets

- **Example 1 Answer**

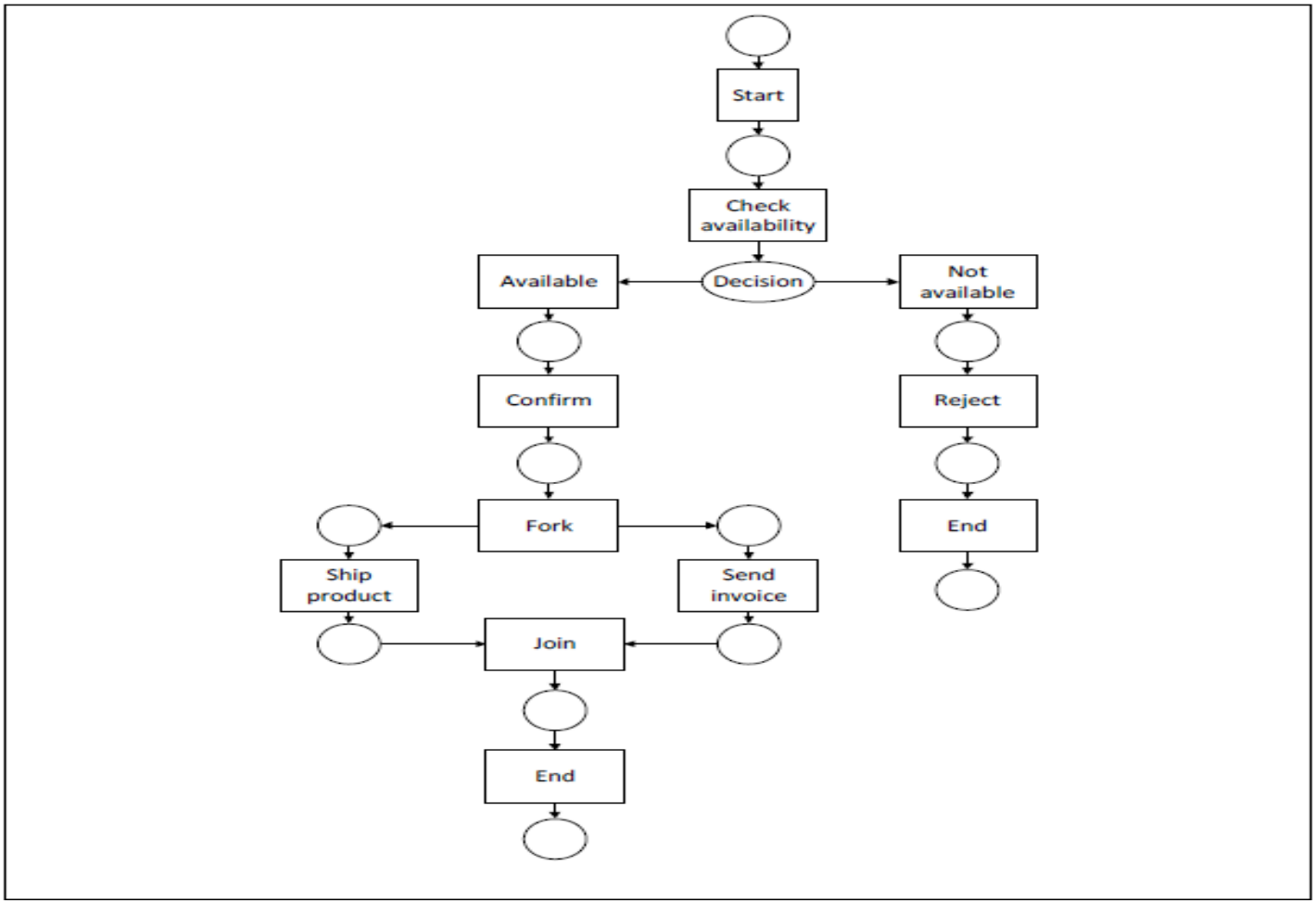

Examples of BPMN process models and transformations to Petri nets

- **Example 2**

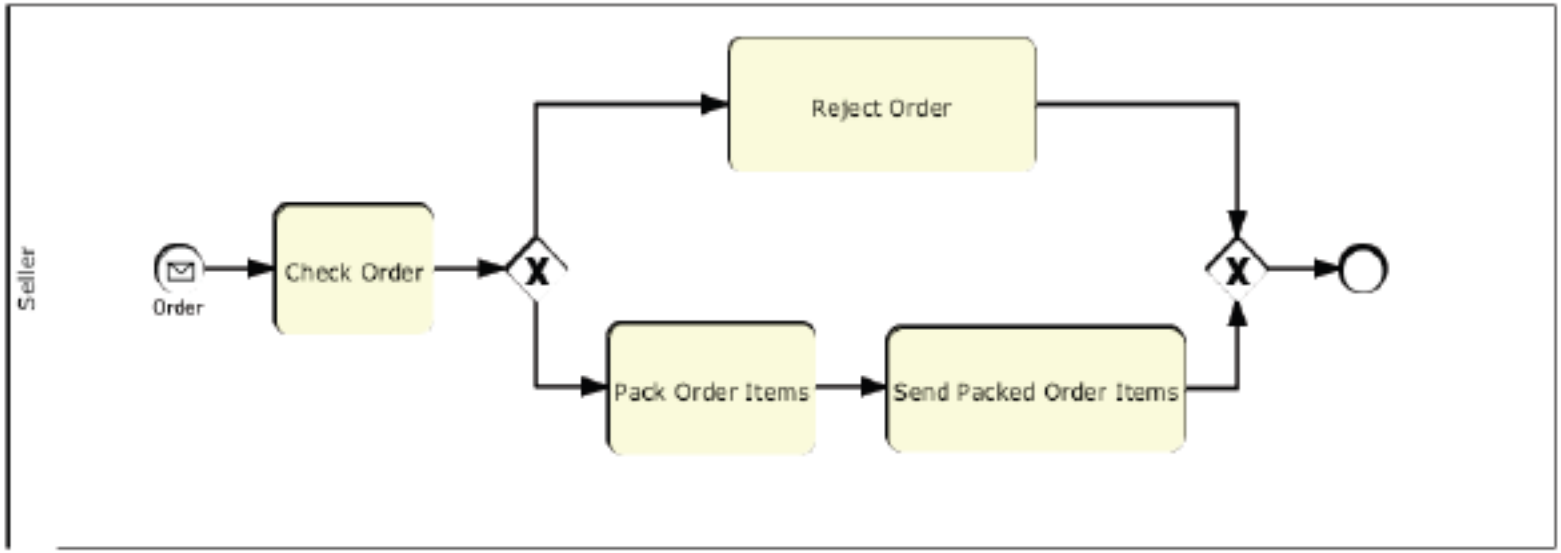

Examples of BPMN process models and transformations to Petri nets

- **Example 2 Answer**

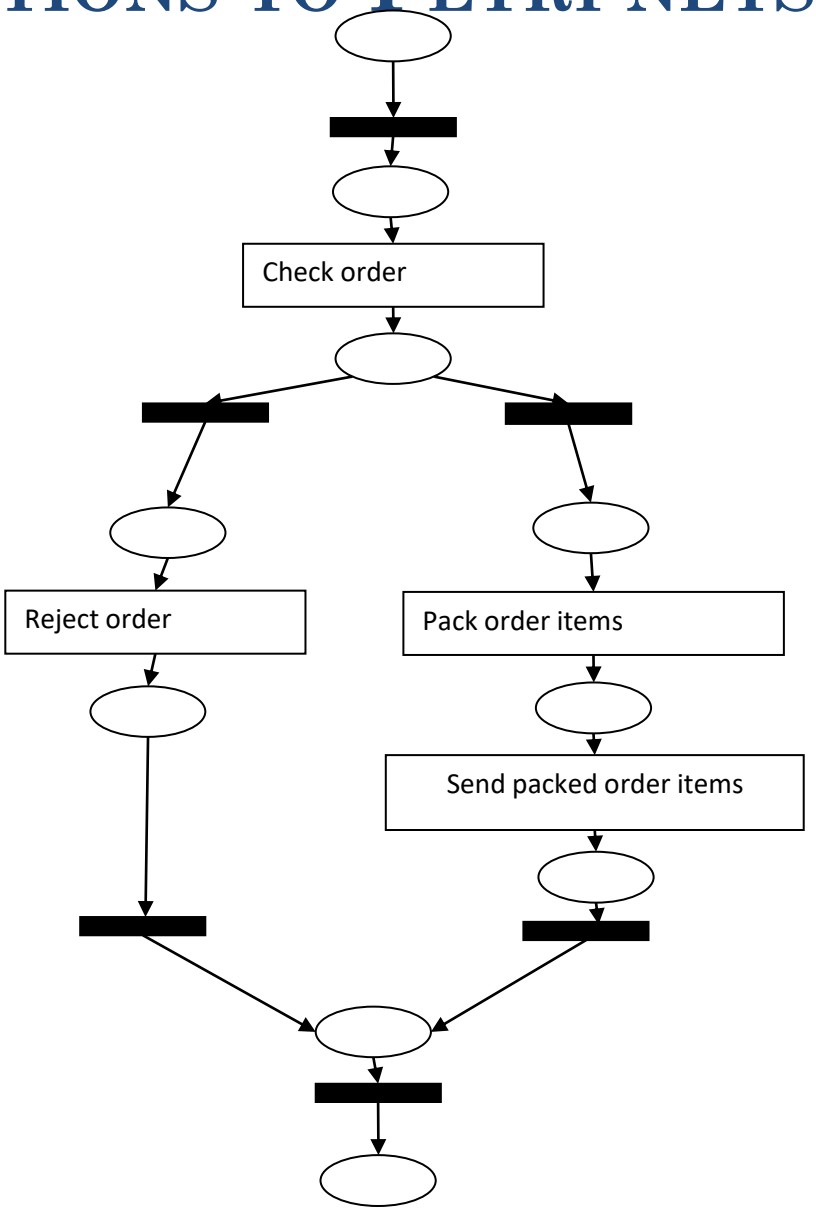

- **Example 3**

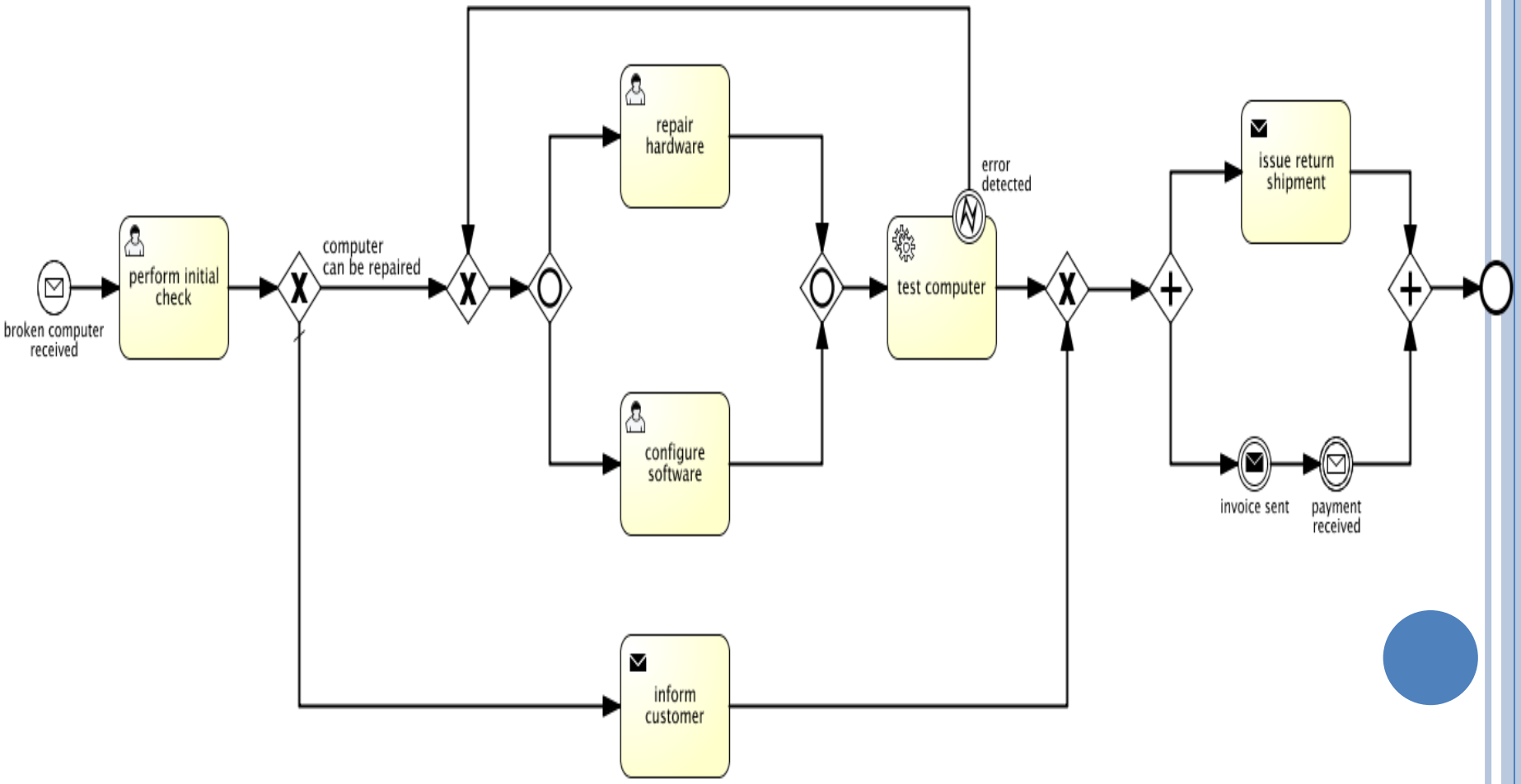
broken computer received
perform initial check
computer can be repaired
repair hardware
configure software
inform customer
error detected
test computer
issue return shipment
invoice sent
payment received
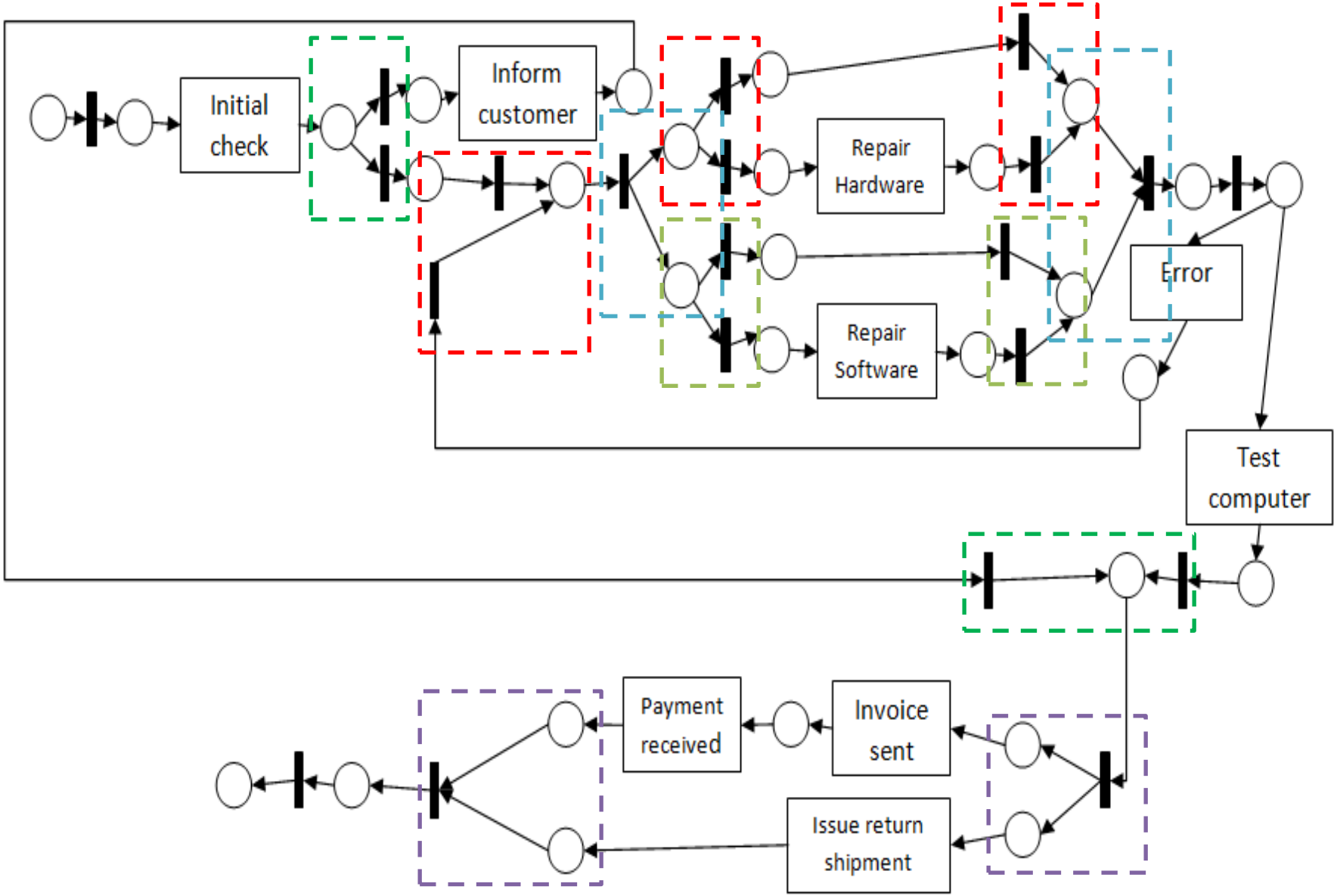
Example 3 answer